Food Spoilage Detection System: Project Report

NAGINENI SAI VINEETH
MUTYALA SAI PAVAN KUMAR
NAGOLU SRIMANTH REDDY

INTRODUCTION

- Food spoilage is a significant global challenge, causing economic losses, food safety risks, and environmental harm due to waste. Traditional methods like sensory evaluation (sight, smell, touch) are unreliable and impractical for large-scale monitoring.

- This project proposes an IoT-based system to detect food spoilage in real-time using sensors, addressing limitations in existing approaches. By focusing on simple, effective solutions, the system aims to reduce food waste, enhance safety, and support sustainable food management.

LITERATURE REVIEW

- **Food Spoilage Issues**: Spoilage leads to major economic losses and safety risks, with approximately one-third of food produced globally wasted annually. Traditional methods relying on human senses are subjective and unsuitable for large-scale operations.

- **IoT and Sensor-Based Approaches**: Previous studies utilize IoT sensors to monitor environmental factors like temperature, humidity, and gas levels (e.g., methane, ethanol). For instance, MQ4 gas sensors detect methane from spoiled solid food, while pH sensors assess liquid food freshness (e.g., milk with pH6.5–6.7).

- **Hybrid Sensing Systems**: Some research proposes combining multiple sensor types, such as gas sensors for solids and pH sensors for liquids, to improve detection reliability and cover a broader variety of foods. This hybrid approach helps address varying spoilage indicators across different food categories and environments.

- **Past Implementations**: Research includes sensor-based systems for specific foods (e.g., milk, bananas) and electronic noses for detecting microbial spoilage in canned goods. However, these systems often lack scalability and integration of multiple detection methods.

GAPS IN THE EXISTING MODEL

Based on the research, two easily addressable gaps were identified for practical improvement:

Limited Testing on Diverse Food Types: Most systems are tested on specific foods (e.g., bananas, milk), limiting applicability to other categories like meat or packaged goods, which are common in real-world settings like supermarkets.

Lack of User-Friendly Notification System: Current systems use technical outputs (e.g., LCD displays, serial monitors) or limited alerts (e.g., email, buzzer), which are not intuitive for non-technical users like warehouse staff or consumers.

MOTIVATION

The motivation for this project is to develop a versatile, user-friendly food spoilage detection system to reduce global food waste, enhance food safety, and promote sustainable supply chain management. By addressing the identified gaps, the system becomes more practical and widely applicable.

- **Solving Gap 1 (Limited Food Types)**: Create a lookup table with spoilage thresholds (e.g., methane levels, pH ranges) for various foods (e.g., fruits, dairy, meat). Program the Arduino to reference this table based on user-selected food types via a simple dropdown menu in the Blynk app. This allows the system to handle diverse foods without hardware changes.

- **Solving Gap 2 (User-Friendly Notifications)**: Implement push notifications and SMS alerts via the Blynk app and a free service like Twilio, delivering clear messages (e.g., "Discard Spoiled Chicken"). Add a dual-LED setup (green for fresh, red for spoiled) for instant visual feedback, making the system accessible to all users.

OBJECTIVES

- Develop an IoT-based system to monitor food freshness in real-time using affordable sensors.
- Support multiple food types (e.g., fruits, dairy, meat) through a standardized threshold table.
- Provide user-friendly notifications (push, SMS, LED) for immediate spoilage alerts.
- Ensure cost-effective and scalable deployment for homes, warehouses, and supply chains.

SYSTEM MODEL

Hardware:

- **MQ4 Gas Sensor**: Detects methane gas (300-10,000 ppm) from spoiled solid foods.
- **pH Sensor**: Measures acidity levels for liquid foods (e.g., milk, water).
- **DHT Sensor:** Monitors temperature and humidity to track environmental conditions.
- **ESP8266 Wi-Fi Module:** Enables real-time data transmission to a cloud platform or mobile app.

- **Buzzer and LED:** Provides audible alerts and visual feedback (green for fresh, red for spoiled).
- **Arduino Uno**: Controls sensors and processes data.
- **Power Supply Board:** Powers the system components.

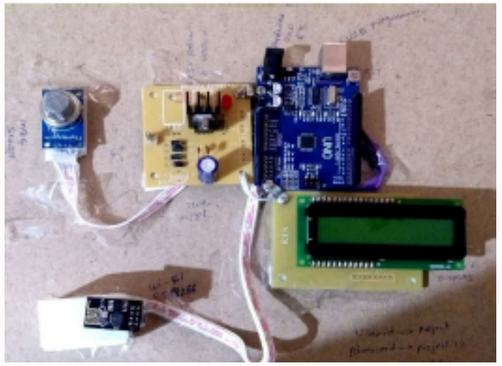

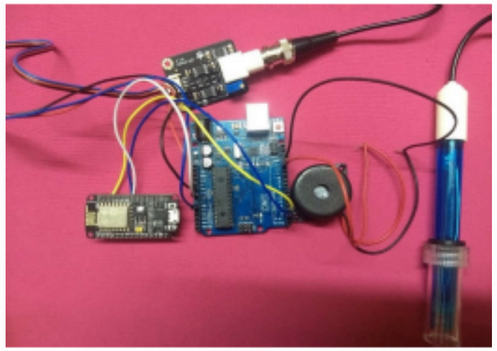

Software:

- **Arduino IDE**: Programs the ESP8266 and sensors, incorporating a lookup table for food-specific thresholds.
- **Blynk Application**: Displays results and sends push notifications/SMS with clear, user-friendly messages.
- **Lookup Table**: A pre-programmed table in Arduino code defining spoilage thresholds (e.g., methane >400 ppm for meat, pH 6.5-6.7 for milk) for various foods.

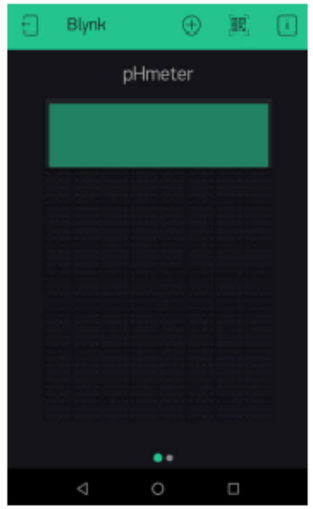

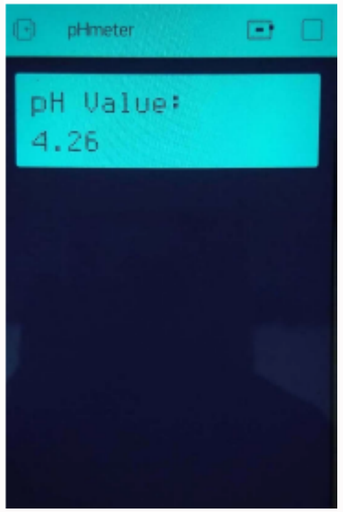

WORK FLOW

- User selects food type (e.g., banana, milk, chicken) via Blynk app dropdown.
- Sensors (MQ4, pH, DHT) collect data on methane, pH, temperature, and humidity.
- Arduino compares sensor data against the lookup table for the selected food.
- If thresholds are exceeded, alerts are triggered via: Push notification/SMS (e.g., "Spoiled Milk Detected").
- Red LED and buzzer activation. Green LED for fresh food.

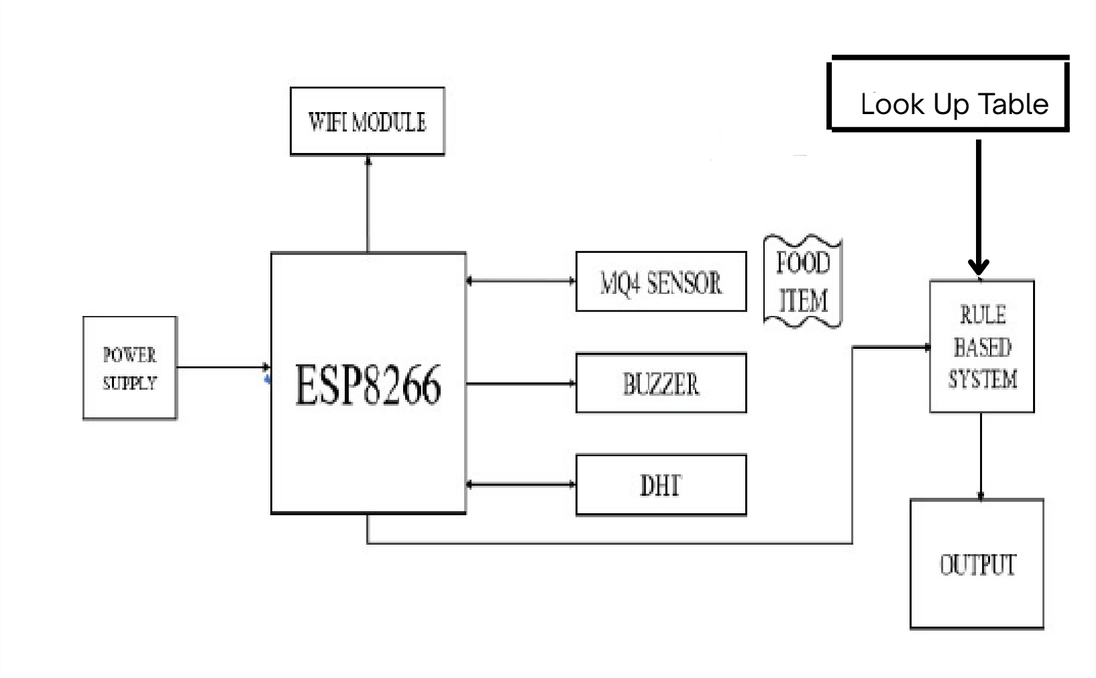

THANK YOU...